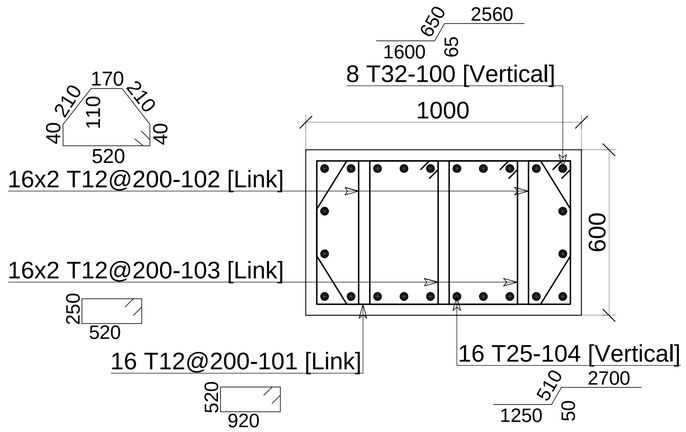

Section 2-2

Scale:1/25

Column C1 (3 Nbrs)

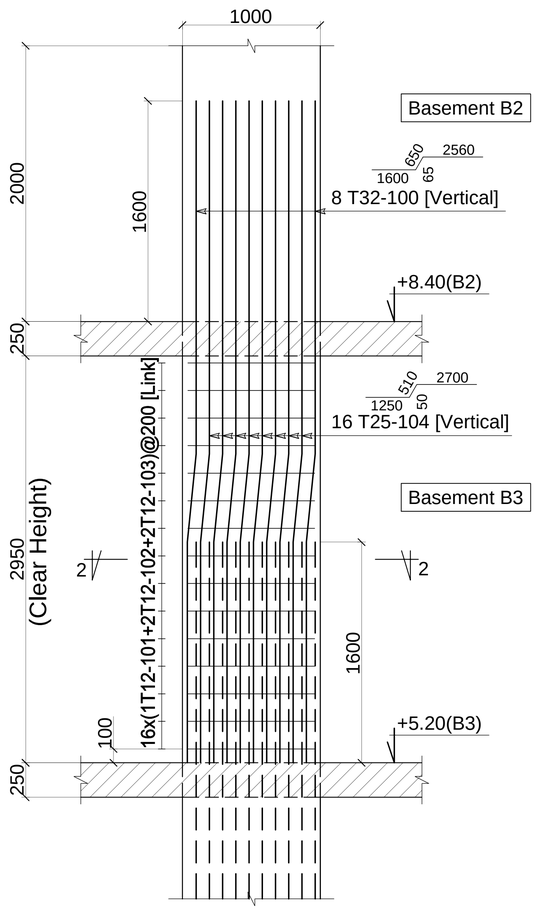

Section 1-1

Scale:1/50

C1 (3 Nbrs)